/U> refer to the way electicity is conducted.

1. The picture shows a way you could hook up a battery, three wires, and a light bulb.

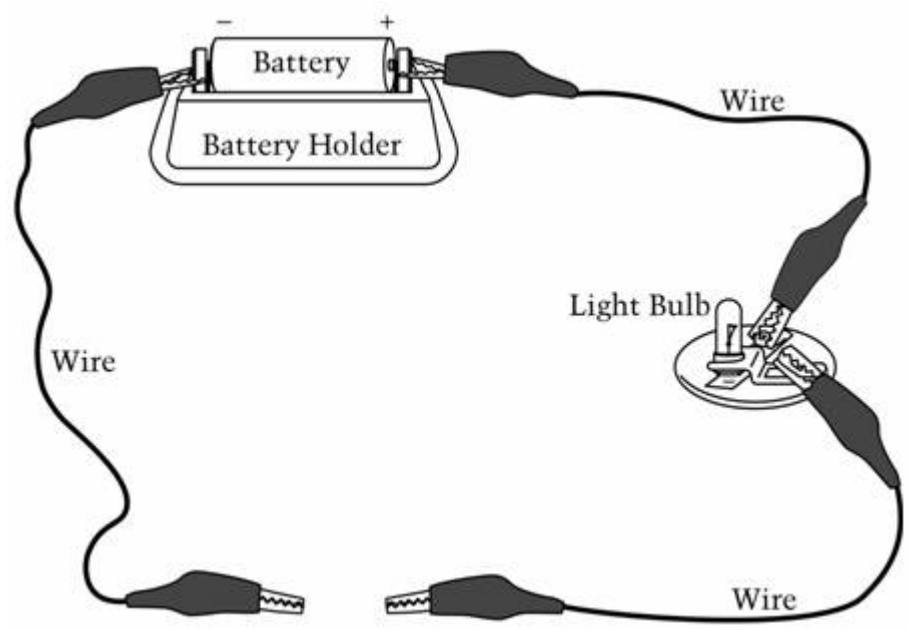

Explain how you could use these things to test an item to see if it is a conductor of electricity.

How could you tell?

_____

_____

_____

_____

_____

_____

_____

_____

Question 1

Scoring Guide

Score & Description
Complete Student response indicates that each item should be placed in the gap in the circuit/tester and attached to both clips. The bulb lights up if the item does conduct electricity. If the bulb does not light up, the item does not conduct electricity.
Partial Student response indicates that the item should be attached to each clip or says the light bulb lights up if the item conducts electricity.
Unsatisfactory/Incorrect Student response places item on circuit in a place other than between the clips, or description is too general, or student gives unrelated answer.

Complete - Student Response

1 The picture shows a way you could hook up a battery, three wires, and a light bulb.

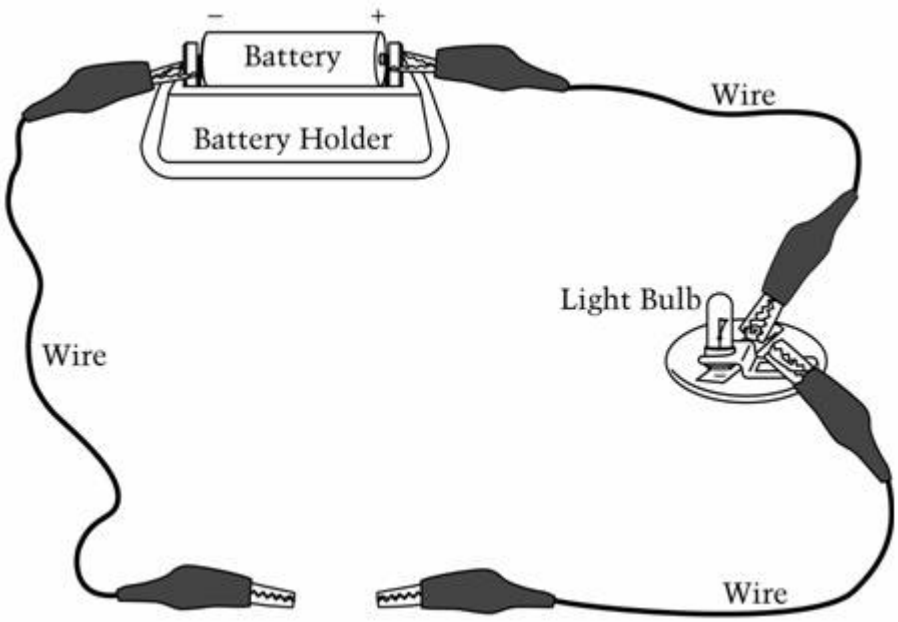

Explain how you could use these things to test an item to see if it is a conductor of electricity.

How could you tell?

You would clamp the aligator clips on to each side of the key, rubber band, coin, lost plate, fork, spoon, and foil if it lights up it is a conductor if it stays off it is an insulator

1 The picture shows a way you could hook up a battery, three wires, and a light bulb.

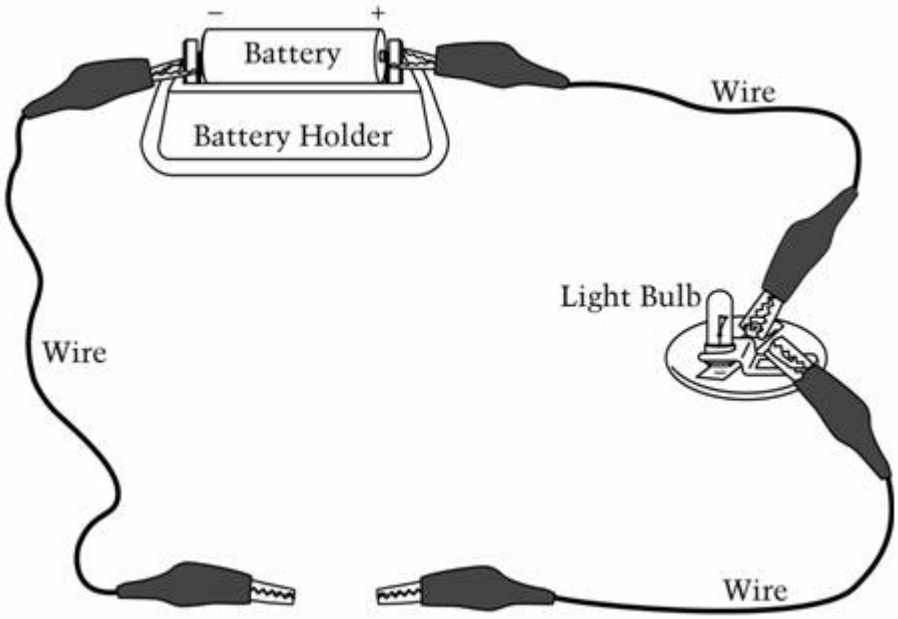

Explain how you could use these things to test an item to see if it is a conductor of electricity.

How could you tell?

By connecting it one end to each clip and seeing if the bulb lights up.

Scorer Comments:

Both responses indicate that the ends of the tested item would be connected to the alligator clips and that the lighting of the bulb is the deciding factor in determining conductivity.

Partial - Student Response

1 The picture shows a way you could hook up a battery, three wires, and a light bulb.

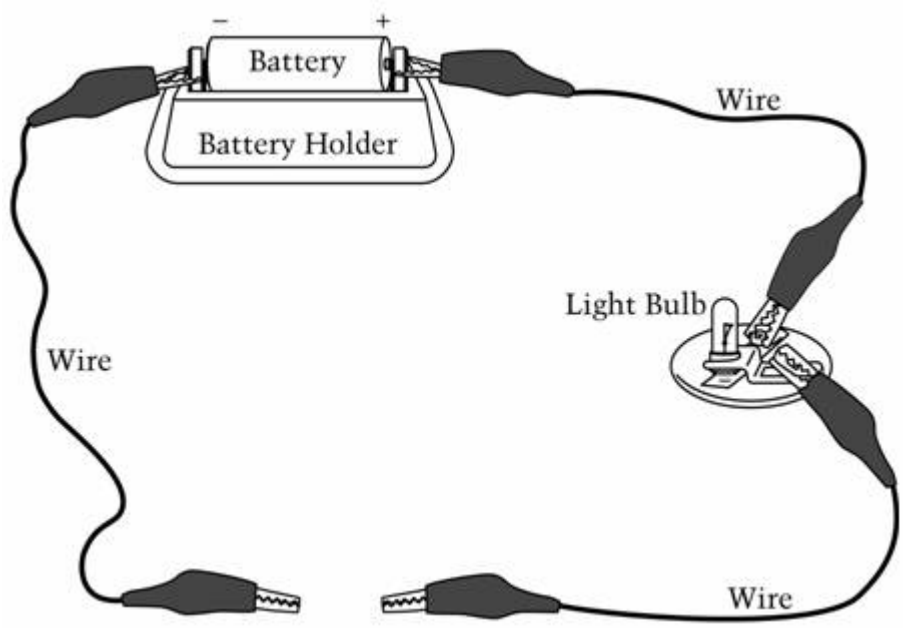

Explain how you could use these things to test an item to see if it is a conductor of electricity.

How could you tell?

I could put the item between the two wires that are open, I could tell be cause all the wires have to be close for it to work and those two are open and they should be closed so you should put the item there and that would close those wires.

1 The picture shows a way you could hook up a battery, three wires, and a light bulb.

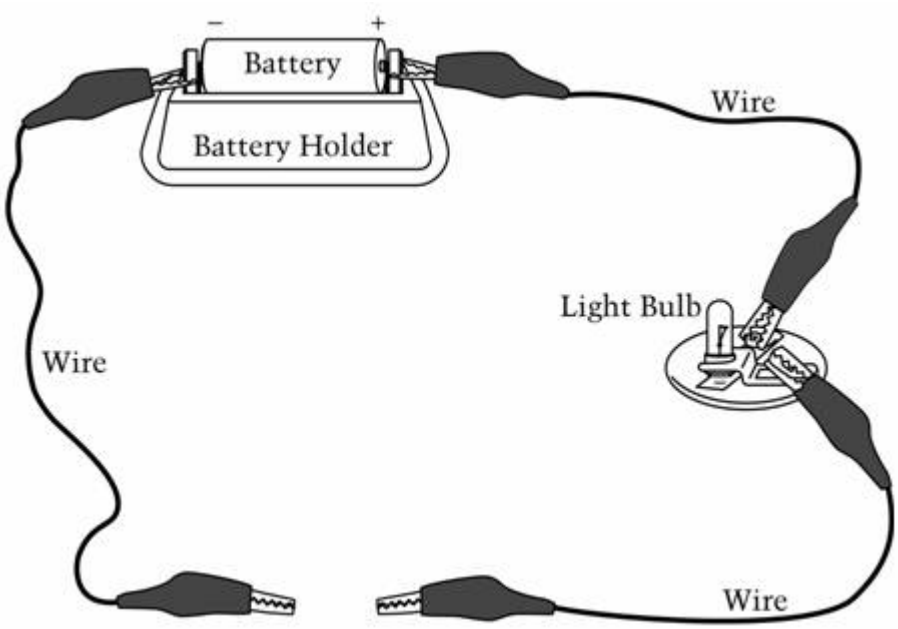

Explain how you could use these things to test an item to see if it is a conductor of electricity.

How could you tell?

Well if it is all hooked up and the thing you use is a conducter then the lightbulb should light up. If it doesn't the item is probably not a conducter.

Scorer Comments:
The first response correctly states where the item should be placed to test for conductivity but does not indicate how someone would know if it is a conductor. The second response correctly explains how someone would know if the item is a conductor but lacks a clear description of the placement of the items for testing.

Unsatisfactory/Incorrect - Student Response

1 The picture shows a way you could hook up a battery, three wires, and a light bulb.

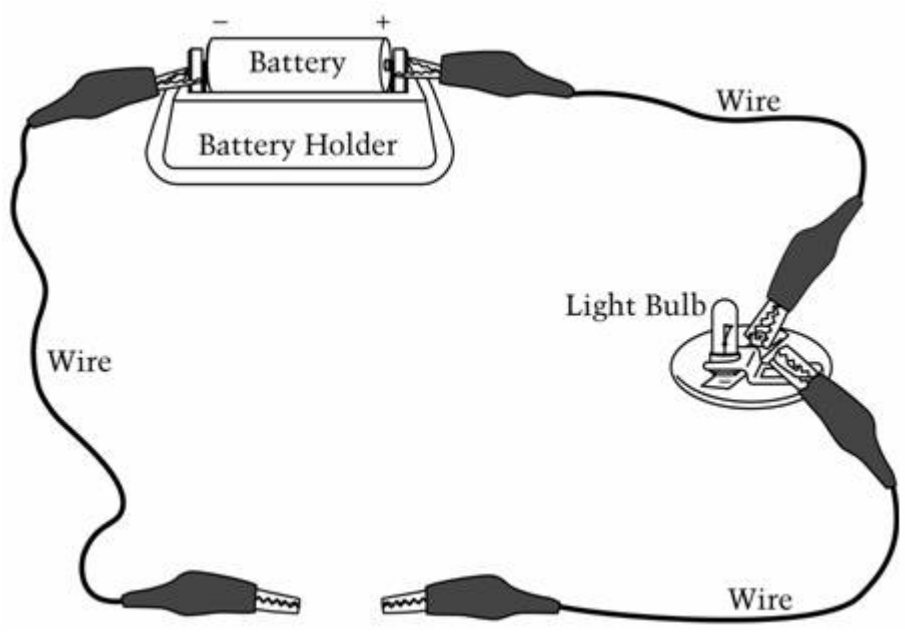

Explain how you could use these things to test an item to see if it is a conductor of electricity.

How could you tell?

You can't hook each one together and you have it hooked like it is to be like. Because you have to open each wire and it will be like you wanted it to be like.

1 The picture shows a way you could hook up a battery, three wires, and a light bulb.

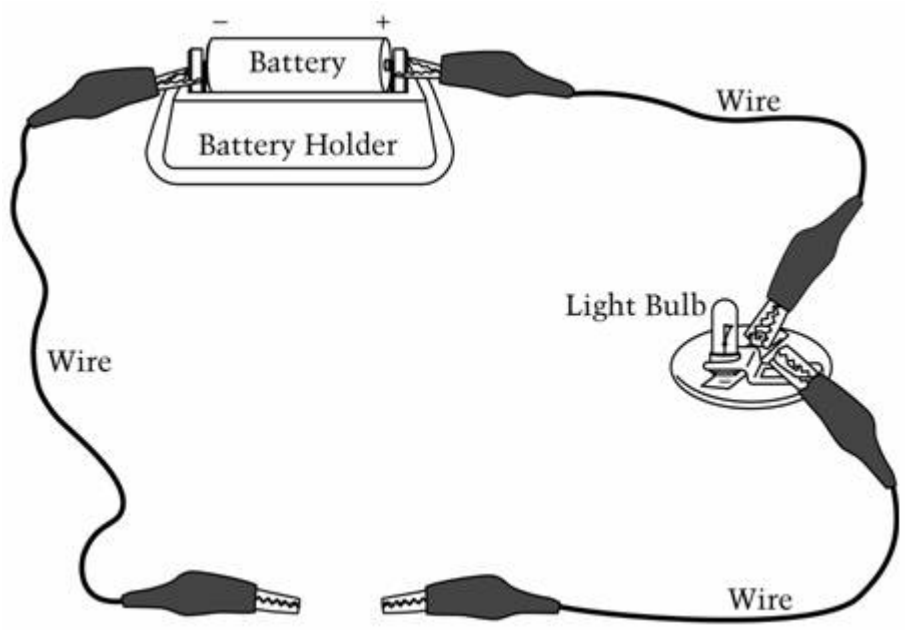

Explain how you could use these things to test an item to see if it is a conductor of electricity.

How could you tell?

You could tell by seeing wich one goes off wen electricity. See wich one sparks.

Scorer Comments:
Neither response provides a correct description of the placement of the items for testing nor an explanation of how conductivity would be determined.

2005 National Performance Results

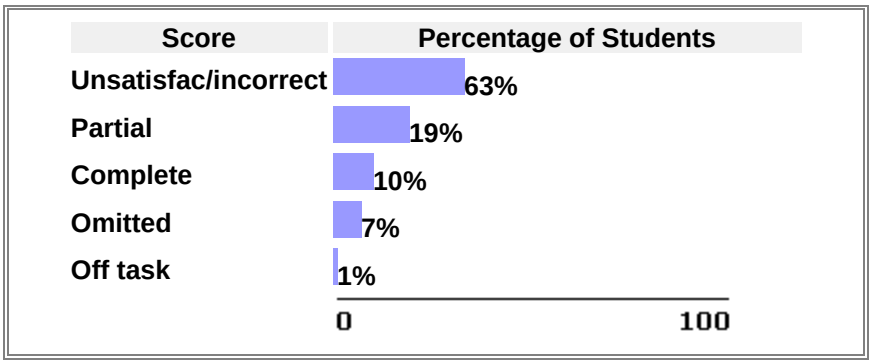

Note:

- These results are for public and nonpublic school students.
- Percentages may not add to 100 due to rounding.

The Fields of Science: *Physical Sciences* (Sub content classification: *Energy and Its Transformations*)
Knowing and Doing Science : *Scientific Investigation*

The Fields of Science

Physical Sciences

This question measures basic knowledge and understanding of the following:

Knowing and Doing Science

Scientific Investigation

Scientific investigation probes students' abilities to use the tools of science, including both cognitive and laboratory tools. Students should be able to acquire new information, plan appropriate investigations, use a variety of scientific tools, and communicate the results of their investigations.